HIDOLI®

HIDOLI 自動餵食器

使 用 說 明 書

感謝您對本產品的支持。
請仔細閱讀本使用說明後再正確使用，謝謝!

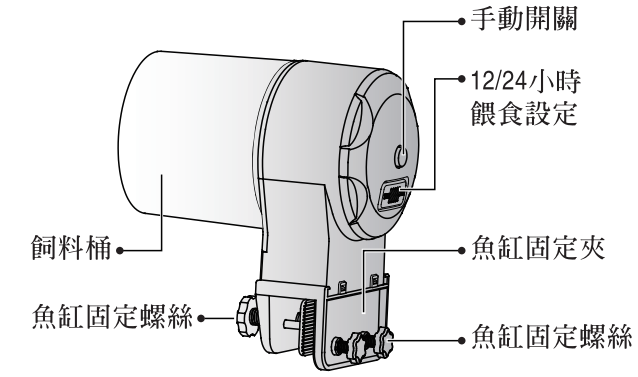

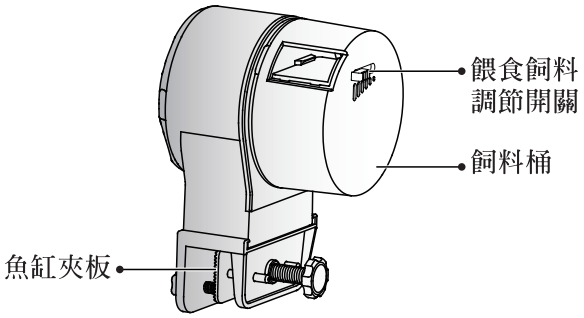

操作方法

1. 取下餵食器固定夾，打開電池蓋，按標示方向裝入電池，然後蓋回電池蓋。（電池裝入後即開始計時）

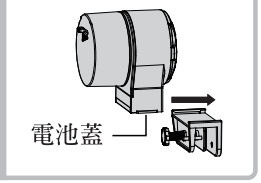

2. 拿下飼料桶，打開飼料蓋，裝入薄片或顆粒飼料，蓋好飼料蓋，開關口向上裝在餵食器上。

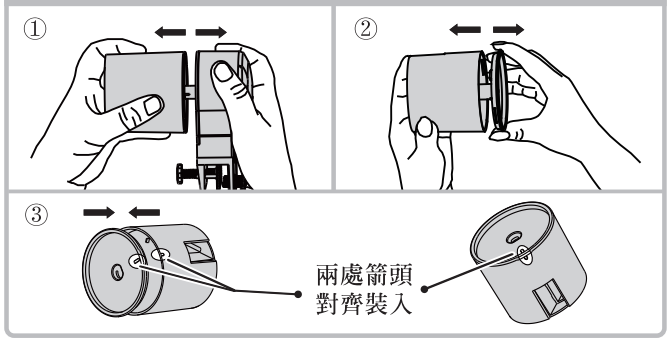

3. 將餵食器飼料桶朝缸內（或對準餵食孔），固定（或貼）在缸上，保持飼料桶與魚缸水平。

4. 調節飼料桶活動開關至出料量滿意為止。

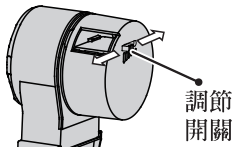

5. 可自由手動餵食，按一下手動開關即可。（手動餵食開關不影響自動計時）

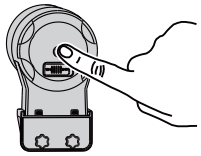

餵食時間設定

1. 自動餵食時間有12H和24H兩種選擇。若設為12H，則每天自動餵食兩次；若設為24H，則每天自動餵食一次。

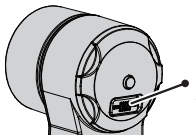

2. 餵食時間的起始有兩種方法更改。第一種，取下電池重新裝入；第二種，撥動12H/24H 開關，之前計時歸零，計時重新開始。

注意事項

1. 該餵食器內置電子電路，不可掉入水中。
2. 非專業人員不可私自拆開餵食器。
3. 不可使用舊電池，電池每六個月需更換一次。

適用於各種魚缸形式，兩種不同的安裝方式，拆裝簡便

1. 餵食器固定夾裝進餵食器主體，放置於魚缸邊緣水平方向擰緊固定夾活動栓。

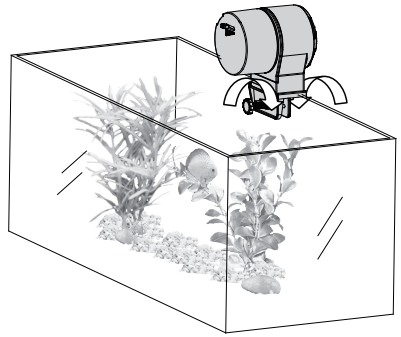

2. 將固定夾取下，插入裝上底座，將底座餵食孔對準中間拉條或缸蓋餵食孔上放置。

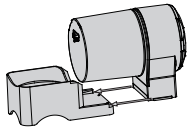

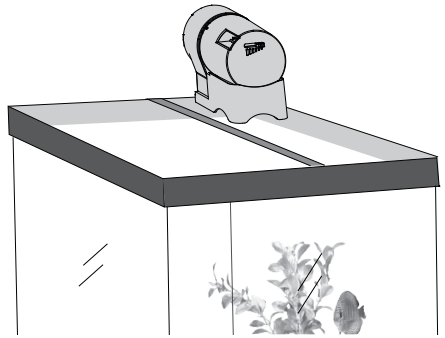

HIDOLI

HIDOLI Auto Feeder

USER MANUAL

Welcome to use our company's products. Please read the statement carefully then use it correctly and safely. Thank you!

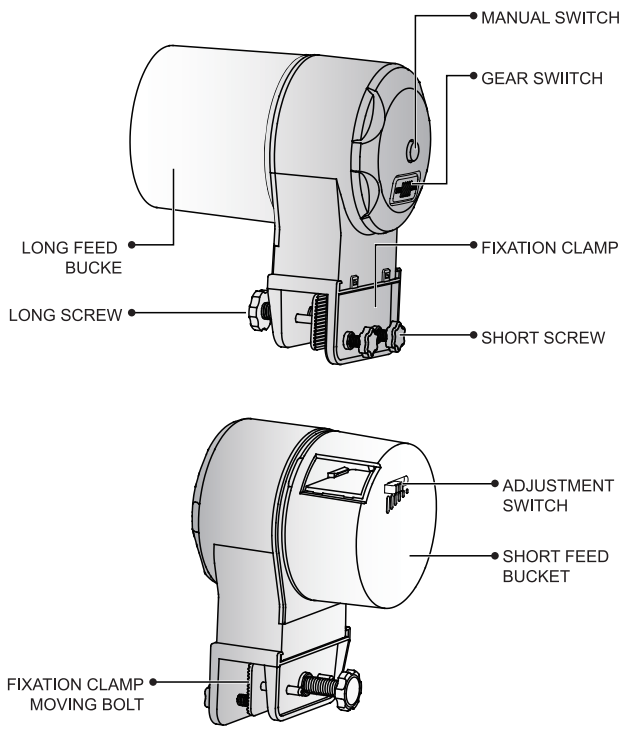

Operation

1. Take off the feeder clamp,open the bettery cover,install a pair of AA bettery according to the direction mark,close the bettery cover.(when the bettery is installed,time start)

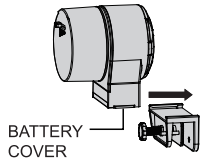

2.Take off the feed bucket,open it,put ordinary fish food tablets or granules,close it,install it on the feeder with opening up.

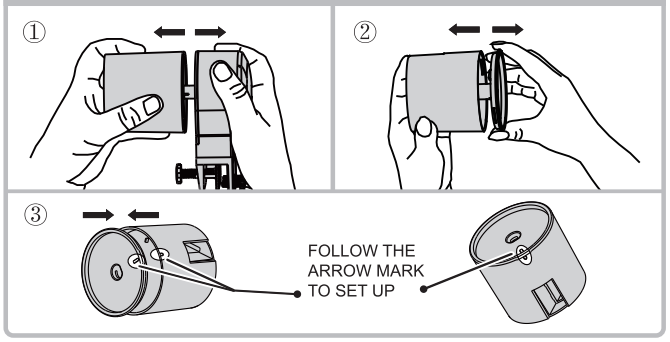

3.Fixing the fish feeder on the tank,make parallel with the tank.

4.Adjust the active switch on the bucket until the feeding quantity meet your need.

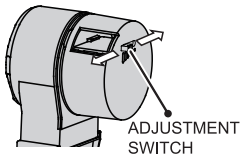

5.Two options for feed time: 12H & 24H. If set 12H, feed twice per day; if set 24H, feed once per day.
Two methods to change the start time of feeding. Option A: take off the battery & reset; Option B: switch the 12H/24H button, all timing will be clear, timing restart.

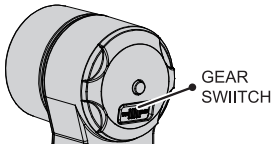

6.Manual feed by press the manual switch.

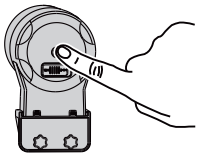

Caution

1.Electronic circuit inside the feeder, forbid falling into the water.
2.Unprofessionals can not open the feeder.
3.Unable to use the old bettery,replace the bettery per 6 monthes.

Suitable for various fish tanks,two methods to install,disassemble easily

1.The clamp is fixed on the fish feeder,tighten the moving bolt on the fish tank the fish tank.

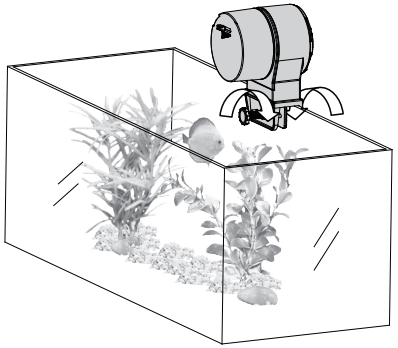
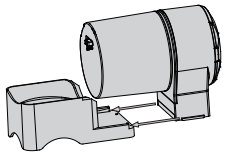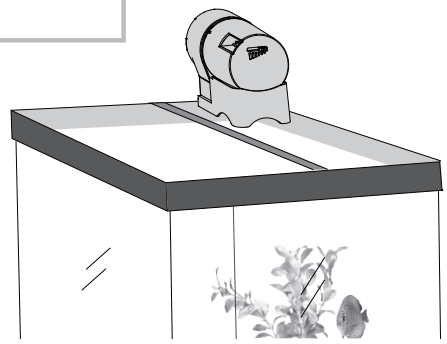
2.Remove the retaining clip insert in into the base and place the base feeding hole on the middle tie or the cylinder head feeding hole.